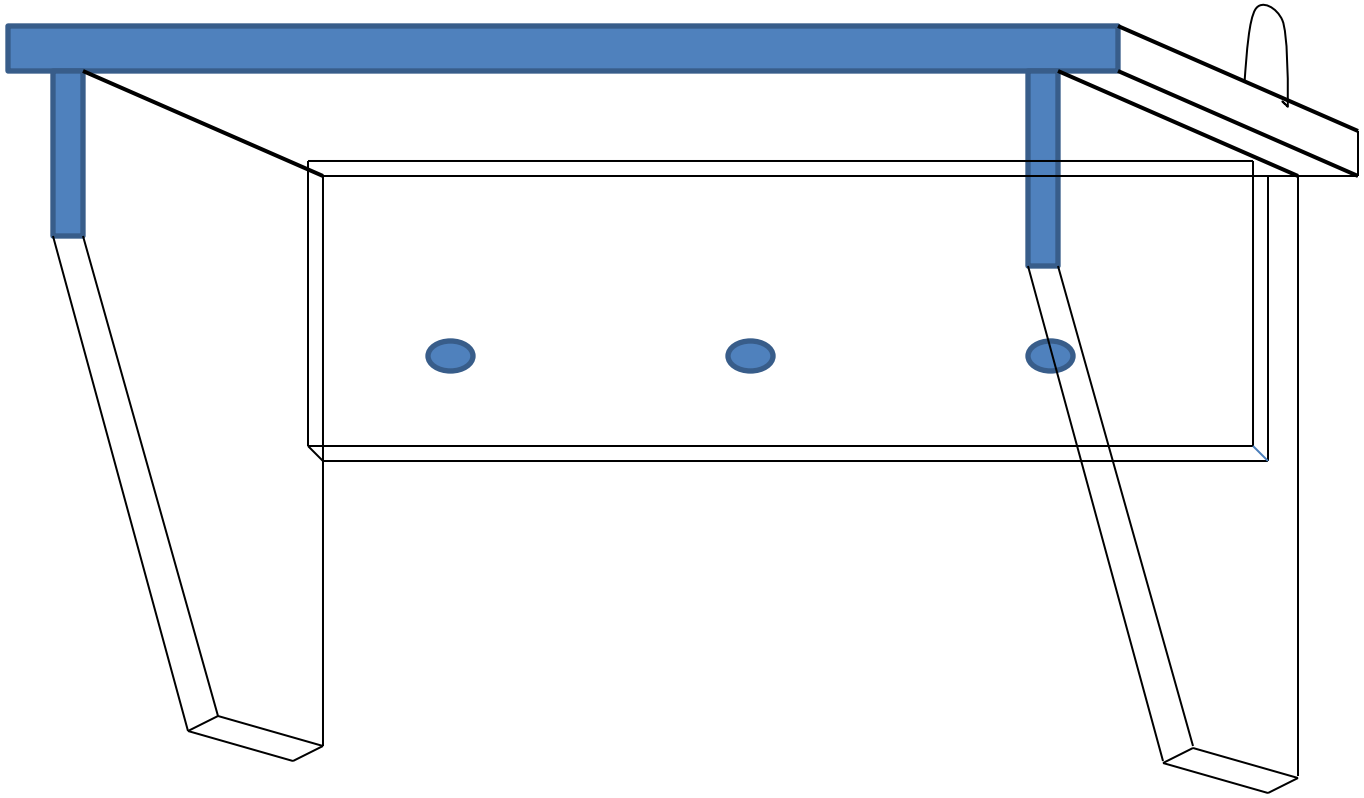

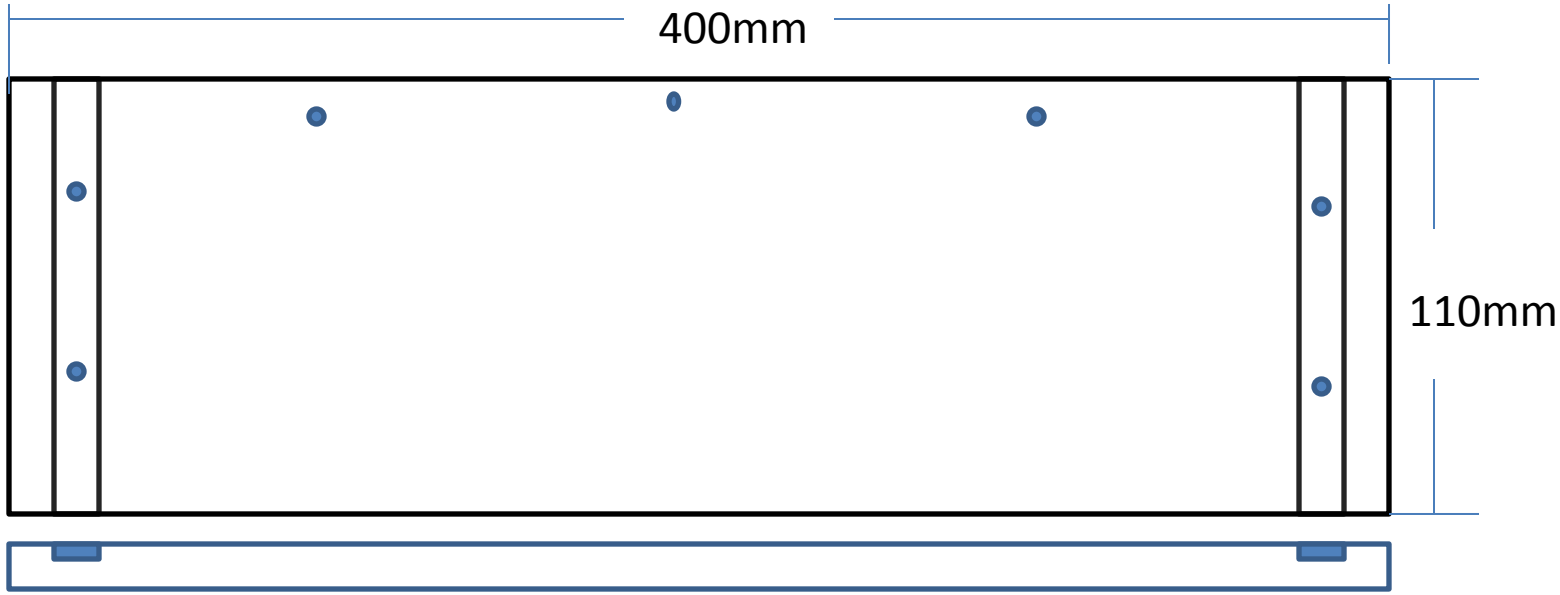
400mm
110mm

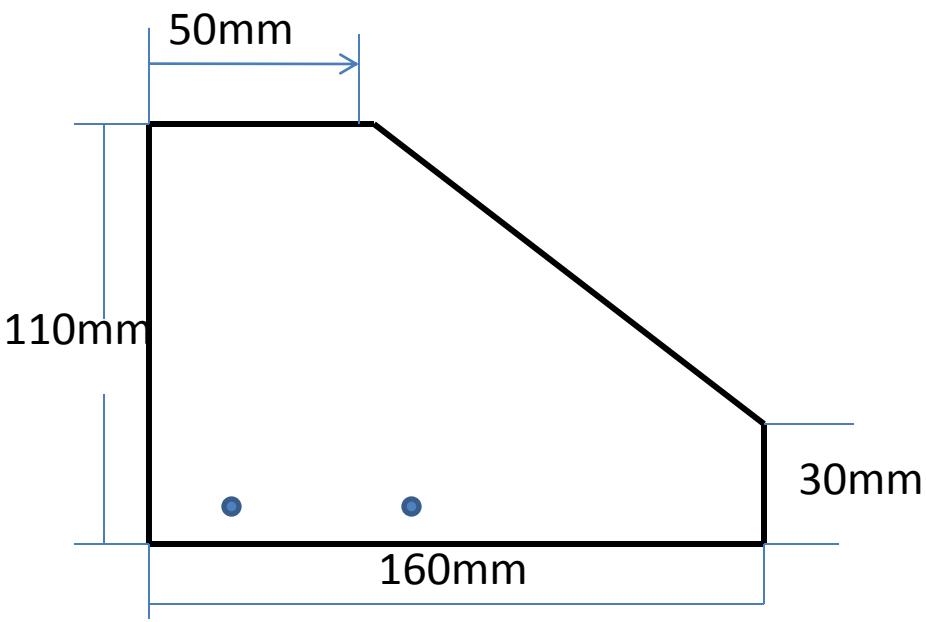
50mm
110mm
30mm
160mm

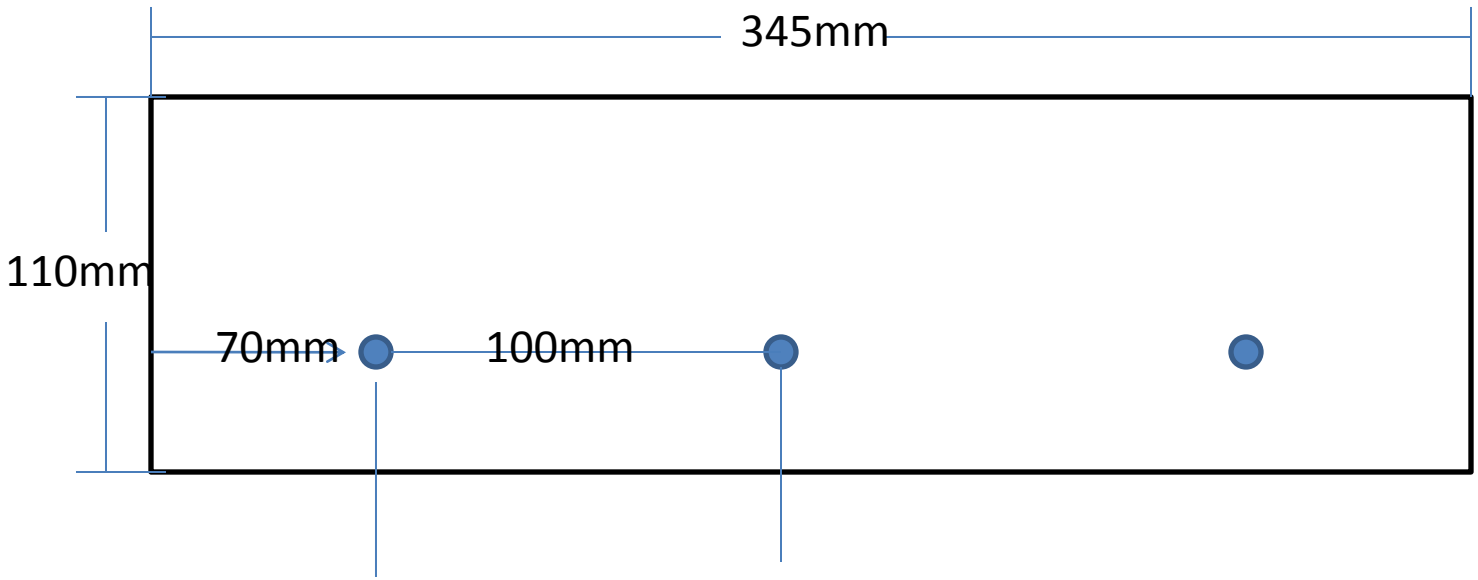
345mm
110mm
70mm
100mm